Mit Sicherheit gut aufgehoben.

HARTMANN TRESORE

EN

General information

INSTALLATION AND OPERATING INSTRUCTIONS

for HTM TB30-30 minibar

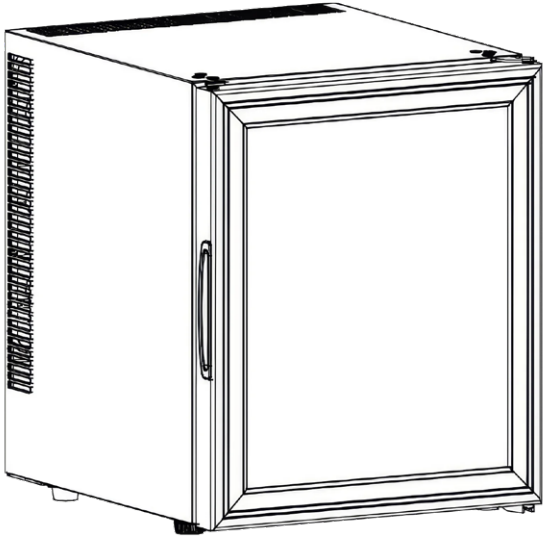

WARNING

1. This appliance is not intended for use by persons (including children) with limited physical, sensory, or mental capabilities, or lack of experience and knowledge, unless they are supervised by a person responsible for their safety or have been instructed in the use of the appliance.
2. Children must be supervised to ensure that they do not play with the appliance.
3. This appliance can be used by children aged 8 years and older, as well as by persons with reduced physical, sensory, or mental capabilities or lack of experience and knowledge, provided they are supervised or have received instruction in the safe use of the device and understand the associated hazards. Children must not play with the device. Cleaning and user maintenance must not be performed by children without supervision.
4. If the power cord is damaged, it must be replaced by the manufacturer, its customer service department, or a similarly qualified person to avoid hazards.
5. To avoid hazards due to instability of the device, it must be secured or installed in accordance with the instructions.
6. When setting up the device, ensure that the power cord is not pinched or damaged.
7. Do not place multiple power strips or portable power supplies at the rear of the device.
8. Keep the ventilation openings in the unit housing or installation structure free of obstructions.
9. Do not use any mechanical devices or other means to accelerate the defrosting process, except those recommended by the manufacturer.
10. Do not damage the refrigerant circuit.
11. Do not use electrical appliances inside the appliance's beverage compartments unless they are of the type recommended by the manufacturer.
12. Do not store explosive substances such as aerosol cans containing flammable propellants in this appliance.
13. Children aged 3 to 8 years may load and unload refrigerators.
14. This appliance is intended for use in households and similar applications, such as:
    - staff kitchens in stores, offices, and other work environments;
    - agricultural properties, as well as by guests in hotels, motels, and other residential-like environments;
    - bed-and-breakfast establishments;
    - catering and similar non-retail applications.
15. To prevent contamination of beverages, please observe the following instructions:
    - Leaving the door open for an extended period can cause a significant rise in temperature inside the appliance's compartments.
    - Regularly clean surfaces that may come into contact with beverages, as well as accessible drainage systems.
    - Clean water tanks if they have not been used for more than 48 hours; flush water-carrying systems connected to a water supply if no water has been drawn for more than 5 days.
    - If the refrigerator is not used for an extended period, turn it off, defrost it, clean and dry it, and leave the door open to prevent mold from forming inside the appliance.

Note: This device contains the flammable refrigerant R600a and the propellant cyclopentane. Avoid all sources of ignition or fire during transport and use.

In the event of a malfunction, contact qualified service personnel. When taking the device out of service, dispose of it at a designated local disposal facility.

TECHNICAL SPECIFICATIONS

1. Heat pump
2. Door
3. Door gasket
4. Handle
5. Cooling plate
6. Shelves
7. Base
8. Lower hinge

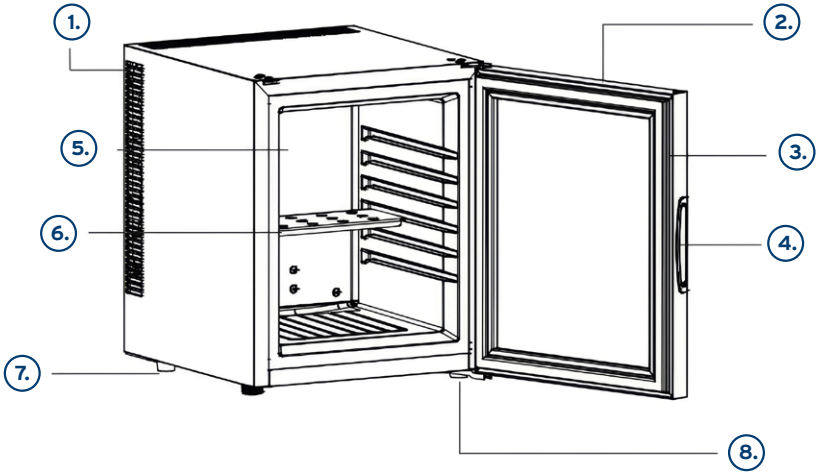

INSTRUCTIONS FOR SETUP AND SAFE USE

General Information

- Position the refrigerator so that the power cord is accessible at all times.
- Keep the refrigerator out of direct sunlight.
- Do not place the appliance in close proximity to heat-generating devices.
- Do not place the refrigerator directly on the floor. Use a suitable base.

Very important

- The refrigerator operates at its best at an ambient temperature of **20–25 °C**. We recommend turning off the unit if the ambient temperature is below 10 °C.
- After plugging the unit into the power outlet, let it cool for **2–3 hours** before placing beverages in the refrigerator compartment.
- **Adequate ventilation** is essential for this type of thermoelectric refrigerator. Insufficient ventilation can damage the internal circuit board (PCB) and significantly reduce the appliance's service life.
- The refrigerator has an **automatic defrosting system**. Manual defrosting is not required.

Power supply

- Before putting the refrigerator into service, it must be connected to a **properly grounded outlet** in accordance with applicable national regulations.
- Check the nameplate (located on the side of the refrigerator) to ensure that the **voltage and frequency** match local power conditions. If this is not the case, the appliance must not be connected to the power supply.

Warning

- If the power cord is damaged, it must be replaced by the manufacturer, its customer service department, or a similarly qualified professional to avoid hazards.
- This appliance is not intended for use by persons (including children) with limited physical, sensory, or mental capabilities, or lack of
- experience and knowledge, unless they are supervised or have been instructed in the use of the appliance by a person responsible for their safety.
- Children must be supervised to ensure they do not play with the appliance.
- **WARNING:** To avoid hazards caused by the appliance becoming unstable, the refrigerator must be secured in accordance with these instructions.

SCOPE OF USE

This device is intended exclusively for indoor use, e.g.,

- in hotels, guesthouses, or other lodging facilities
- in stores and offices

This device must not be used outside a building.

INBETRIEBNAHME DES PRODUKTS

- Please check the unit for any defects when unpacking it.
- Install the unit according to the **installation notes**.
- We recommend securing the unit to a stable surface using the feet to prevent it from tipping over.
- Plug the minibar into an electrical outlet.
- The temperature control knob is located on the lamp.
- Set the desired temperature by turning the knob to the right to increase the cooling power.
- The settings are adjusted in increments.

Controller inside

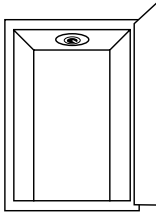

Control knob up

HTM TB24-03

INSTALLATION NOTES

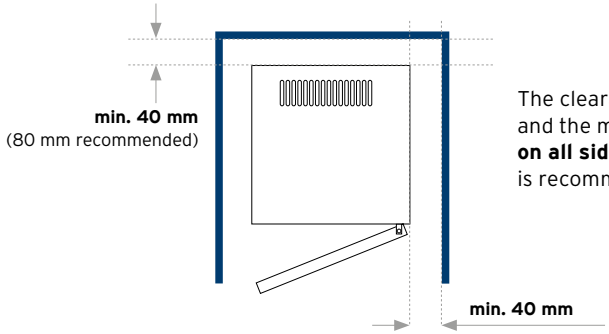

The clearance between the furniture walls and the minibar should be **at least 40 mm on all sides**. However, a **clearance of 80 mm** is recommended **at the back**.

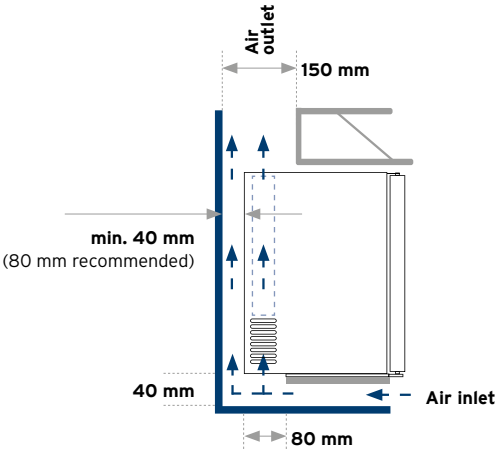

Minibars withdraw heat from the interior to cool it. This heat is discharged again via the back. For this reason, the air must be able to circulate freely around the minibar. To achieve this, **a free ventilation cross-section of at least 200 cm²** must be guaranteed during installation for inlet and discharge air. Generally speaking, the following applies: **The better the hot discharge air can be dissipated away from the minibar, the better its efficiency, i.e. energy consumption drops**. The inlet air for the minibar is supplied from below. The hot discharge air must always be discharged from the top (chimney effect).

CHANGING THE DOOR HINGE SIDE

The refrigerator is designed with a reversible door hinge. The door can be opened either to the left or to the right. The door hinge is set to the left by default.

Safety Note

- Disconnect the refrigerator from the power supply before performing any work on the appliance.
- Work may only be performed when the appliance is disconnected from the power supply.

Procedure

If you wish to change the door's opening direction, please remove the additional upper hinge from the bag included with the user manual and proceed as follows:

1. Remove the three screws securing the currently installed upper hinge (on the right side of the appliance).
2. Remove the upper and lower hinges.
3. Reinstall the door on the opposite side of the unit.
4. Mount the hinges on the new side and secure them with the three self-tapping screws provided.

After completing the installation, check that the door is properly aligned, opens and closes smoothly, and closes tightly.

PRODUCT FEATURE DESCRIPTION

1. This appliance is intended exclusively for use as a pantry refrigerator.
2. This refrigerator is not suitable for freezing food.
3. A setting of 17 °C is recommended for pantry use.
4. The factory-set shelf arrangement represents the most energy-efficient use of the refrigerator.
5. The shelf configuration shown below is recommended to ensure the most energy-efficient operation of the refrigerator.

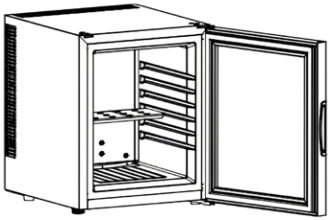

- At an **ambient temperature of 25 °C** and with an **empty pantry refrigerator**, the cooling time from **25 °C to 17 °C** is approximately **3.5 hours**.
- A **temperature setting of 17 °C is recommended** for operating the pantry refrigerator. **Energy consumption is 0.164 kWh/24 h**.
- **Energy consumption is lower** when the set temperature is **higher than 17 °C**.
- **Energy consumption is higher** when the set temperature is **lower than 17 °C**.

ELECTRICAL SCHEMATIC

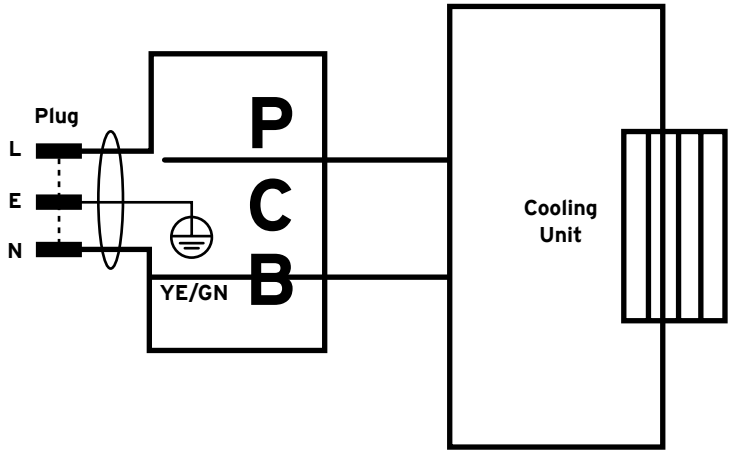

ENERGY-SAVING TIPS

- Place the **refrigerator** in the **coolest part of the room**, away from heat-generating appliances and out of direct sunlight.
- **Overloading the refrigerator** causes the thermoelectric cooling system to run longer.
- Minimize the **frequency and duration of door openings**. If possible, remove all needed items at once and close the door immediately afterward.
- A typical characteristic of **heat pipe cooling units** is a longer recovery time after frequent or prolonged door openings. In this case, it may be necessary to wait a little longer for the temperature to return to its previous level. This is **normal operation and not a malfunction**.
- **Heat pipe technology** results in **very low operating costs** and is **environmentally friendly**, as it contains **no CFCs**.

TIPS AND HELP

PROBLEM	POSSIBLE CAUSE	SUGGESTED SOLUTION
Appliance is not working.	There is no power supply to the appliance.	Check the appliance power supply.
	Cable or power supply unit is faulty.	Contact a service employee at Hartmann Tresore AG*.
	Fault in the electronics	Contact a service employee at Hartmann Tresore AG*.
Appliance has a poor cooling performance.	The room temperature is not in the optimum range.	Adapt the room temperature accordingly.
	The door has been opened too often.	Try to reduce the number of times the door is opened.
	The appliance door does not close properly.	See the section "The door does not close properly."
	The temperature controller is not set properly.	Set as required.
	The appliance has not been installed properly (wrong clearance dimensions).	Correct the clearance dimensions.
	The appliance has been exposed to heat or direct sunlight.	Position the appliance in a cool spot and avoid direct sunlight.
The interior lighting is not working.	There is no power supply to the appliance.	Check the appliance power supply.
	The LED lighting is faulty.	Contact a service employee at Hartmann Tresore AG*.
The door does not close properly.	The door hinge has not been installed correctly.	Correct the installation in accordance with section 6 (p. 10).
	The door seal is soiled.	Clean the door seal in accordance with section 9 (p. 13).
	The shelves, brackets or baskets are not in the correct position.	Adjust the components again.
Temperature control is not working.	Fault in the control electronics	Contact a service employee at Hartmann Tresore AG*.

*Tel. +49 (0)5251 1744-179 | Fax +49 (0)5251 1744-999 | Mail: support@hartmann-tresore.de

CLEANING AND CARE

Warning! Danger to life!

- Always disconnect the appliance from the power supply before carrying out any cleaning work.

Please note! Risk of damage!

- Never clean the appliance under running water
- Do not use any strong detergents or hard objects for cleaning.
- Please use a soft cloth and mild household detergent to clean the inside and outside of the appliance before putting it into operation. Do not use soap or aggressive cleaning agents for cleaning.
- Make sure that the appliance seals do not come into contact with grease or grease-like substances.
- Rub the seals and hinges with talcum powder from time to time. This guarantees that they will remain supple and have a long service life.
- Please clean dust and any other dirt off the back of the appliance once a year in order to guarantee proper appliance function.

DISPOSAL

PLEASE NOTE!

This appliance is marked in accordance with the European Directive 2002/96/EC on waste electrical and electronic equipment!
The appliance packaging is made of reusable materials!

- The correct separate collection of these appliances and its eco-friendly treatment and disposal contribute to preventing potential negative impact on the environment and health.
- The packaging materials can be hazardous for children. For this reason, keep these materials out of the reach of children and dispose of them in accordance with the waste instructions.
- Do not dispose of the packaging materials together with normal waste.
- If necessary, contact your authorised sales agent or the waste collection centre in your region for information on disposing of your minibar.
- Remove the mains plug and any locks before disposal to protect children from possible hazards.

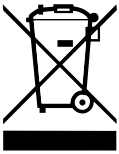

This symbol, which you can see on the product itself and in the product documents, means that the minibar must not be disposed of with normal household waste. The product must be taken to a special waste collection centre to guarantee the regulation-compliant disposal required for electronic appliances. If necessary, contact the waste collection centre or your sales agent for further information.

GUARANTEE

The guarantee period begins with product purchase and lasts 12 months.

Please note! The guarantee is rendered invalid if

- the installation and operating instructions are not followed correctly and lead to malfunctions.
- the appliance is modified in any way.
- no original spare parts are used.

The guarantee is not applicable for any personal injury or property damage caused by non-observance of the operating manual or incorrect use of the appliance.

IMPORTANT: Product characteristics may be changed without advance notice.

Mit Sicherheit gut aufgehoben.

www.hartmann-tresore.de

HARTMANN TRESORE GmbH
Pamplonastraße 2
33106 Paderborn
Deutschland

+49 (0)5251 1744-179
support@hartmann-tresore.de